26. Extension Case

A: REMOVAL

1) Remove the transmission assembly. <Ref. to 4AT-37, REMOVAL, Automatic Transmission Assembly.>
2) Remove the rear vehicle speed sensor.
- MP-T model

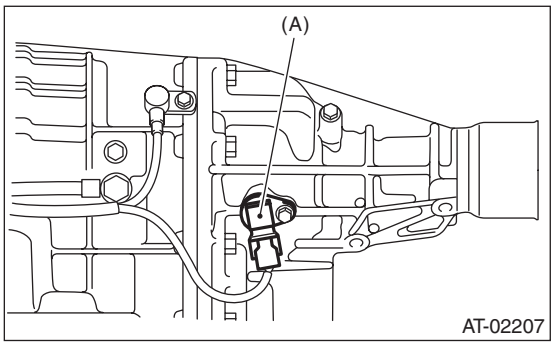

(A) Rear vehicle speed sensor

- VTD model

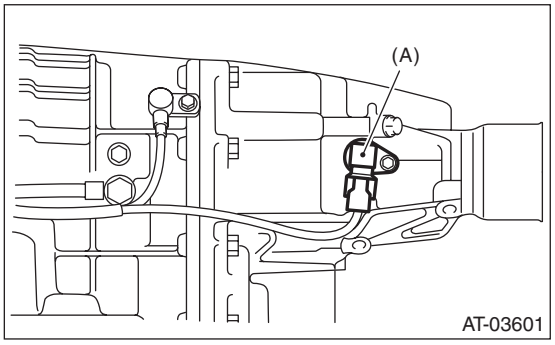

(A) Rear vehicle speed sensor

3) Separate the transmission case and extension case section.

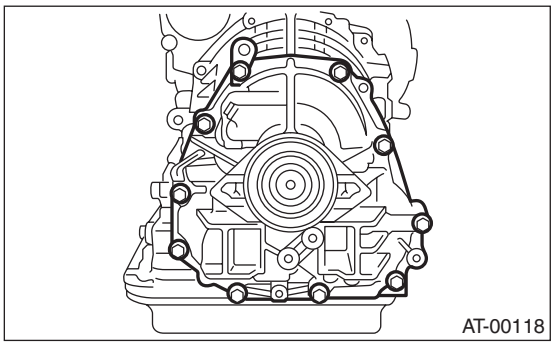

B: INSTALLATION

1) Apply Vaseline to the contact surface, and attach the selected thrust needle bearing to the end surface of the reduction drive gear.

NOTE:
Install the thrust needle bearing in the correct direction.

2) Install a new gasket.
3) Install the extension case to transmission case.
4) Tighten bolts to secure the extension case.

Tightening torque:
25 N·m (2.5 kgf-m, 18.4 ft-lb)

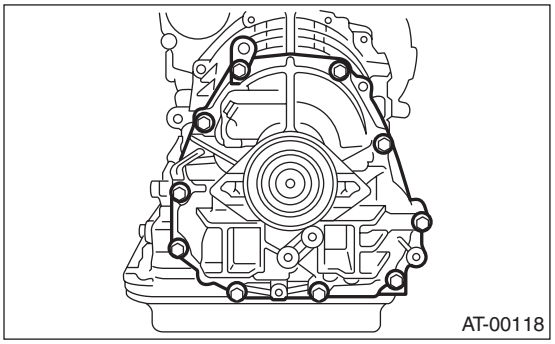

5) Install the rear vehicle speed sensor.

Tightening torque:
7 N·m (0.7 kgf-m, 5.1 ft-lb)

- ***MP-T model***

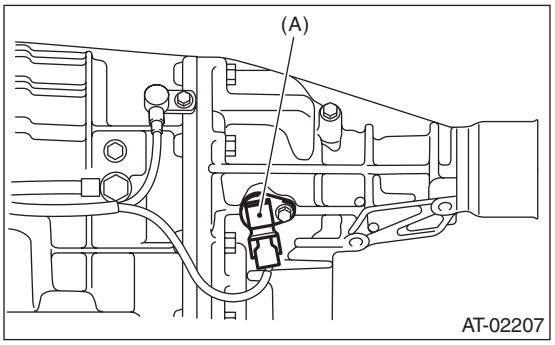

(A) Rear vehicle speed sensor

- ***VTD model***

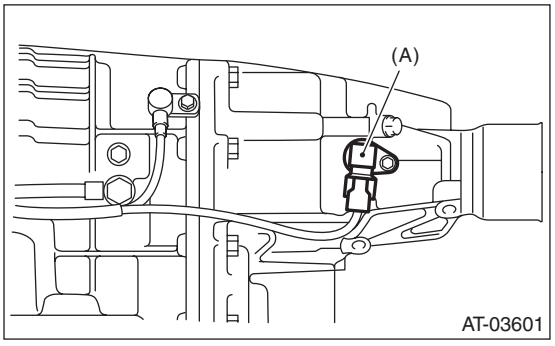

(A) Rear vehicle speed sensor

6) Install the transmission assembly. <Ref. to 4AT-39, INSTALLATION, Automatic Transmission Assembly.>

C: DISASSEMBLY

1. MP-T MODEL

1) Take out the transfer clutch by lightly tapping the end of the rear drive shaft.

NOTE:
Be careful not to damage the oil seal of the extension.

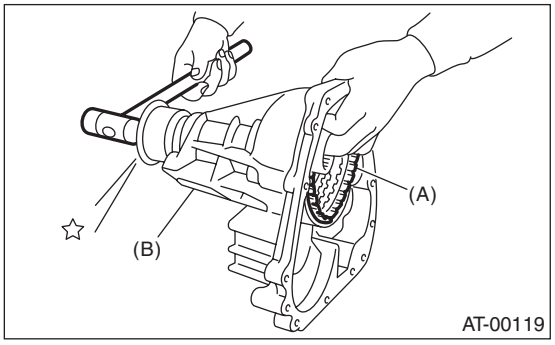

(A) Transfer clutch
(B) Extension case

2) Remove the transfer clutch pipe while being careful not to deform the pipe.

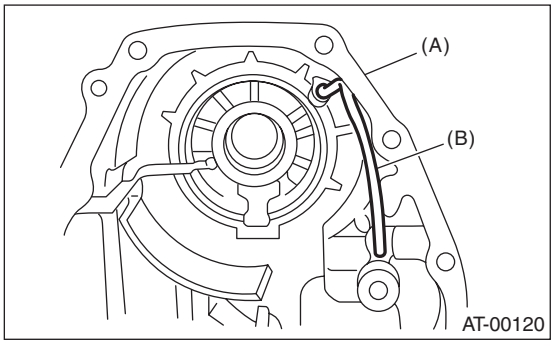

(A) Extension case
(B) Transfer clutch pipe

3) Remove the dust cover from extension case.
4) Remove the oil seal from the extension case.

2. VTD MODEL

1) Using the ST1, ST2, ST3, and a press, remove the snap ring.

ST1	398673600	COMPRESSOR
ST2	498627100	SEAT
ST3	398663600	PLIER

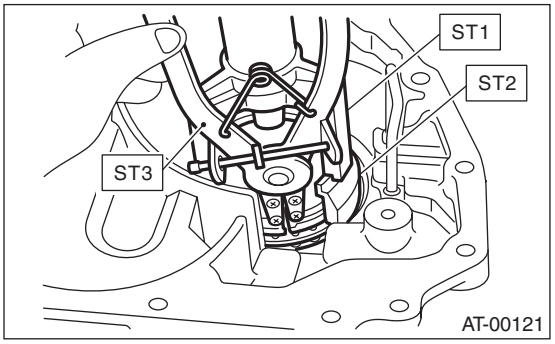

2) Remove the test plug.

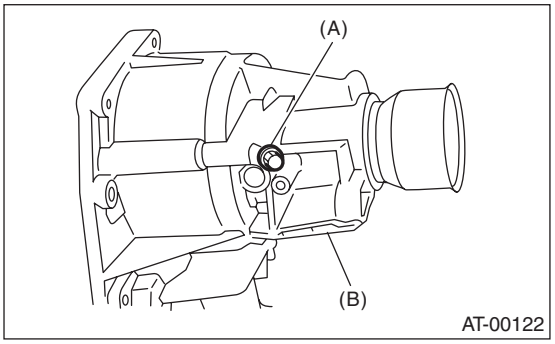

(A) Test plug
(B) Extension case

3) Remove the clutch piston by applying compressed air.

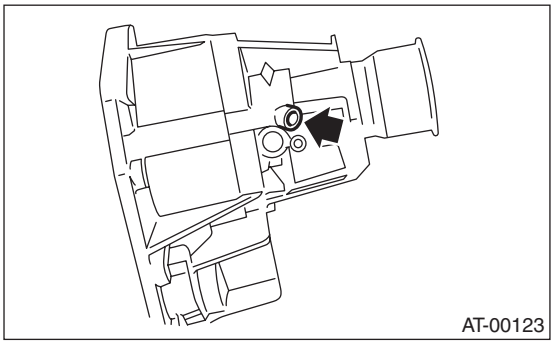

4) Remove the transfer clutch pipe while being careful not to deform the pipe.

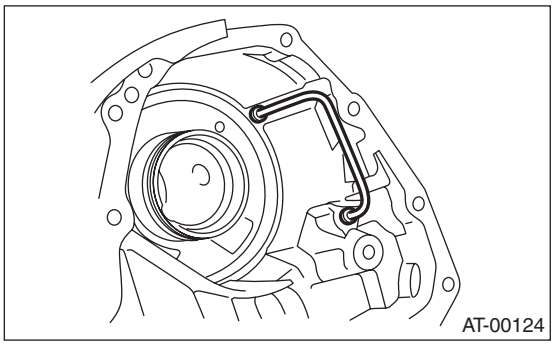

5) Remove the dust cover from extension case.
6) Remove the oil seal from the extension case.

D: ASSEMBLY

1. MP-T MODEL

1) Press-fit the new oil seal using ST and the press.
ST 498057300 INSTALLER
2) Press-fit the dust cover.
3) Install the transfer clutch pipe to the extension case while being careful not to deform the pipe.

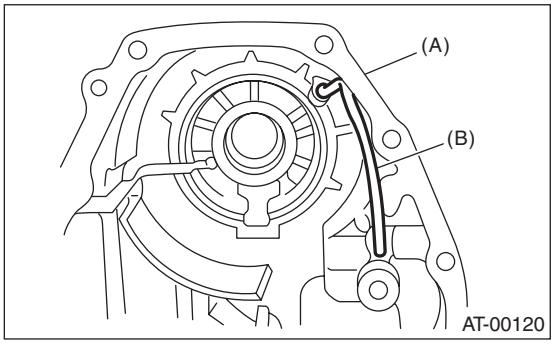

(A) Extension case
(B) Transfer pipe

4) Install the transfer clutch assembly to the case.

NOTE:
- Be careful not to damage the seal ring.
- Press-fit the clutch assembly to the bottom of the bearing shoulder completely.

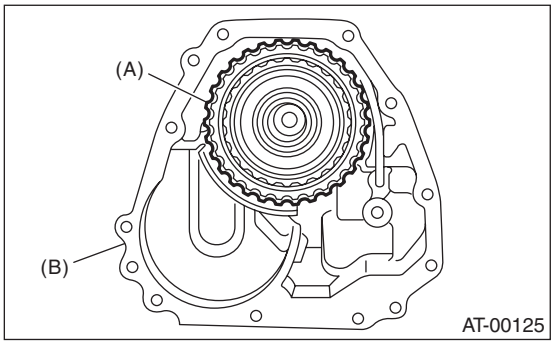

(A) Transfer clutch
(B) Extension case

2. VTD MODEL

1) Press-fit the new oil seal using ST and the press.
ST 498057300 INSTALLER
2) Press-fit the dust cover.
3) Install the transfer clutch pipe to the extension case while being careful not to deform the pipe.

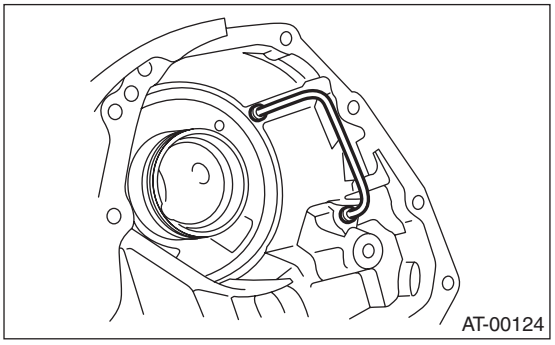

4) Apply ATF to a new O-ring and install the test plug.

Tightening torque:
13 N·m (1.3 kgf-m, 9.6 ft-lb)

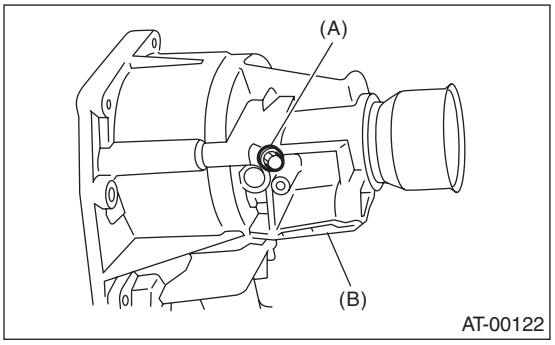

(A) Test plug
(B) Extension case

5) Insert the multiplate clutch, drive plate, driven plate and spring retainer.

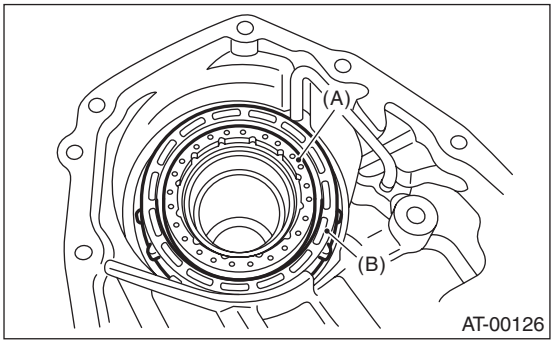

(A) Spring retainer
(B) Multi plate clutch piston ASSY

6) Using the ST1, ST2 and ST3, install the snap ring.

ST1	398673600	COMPRESSOR
ST2	498627100	SEAT
ST3	398663600	PLIER

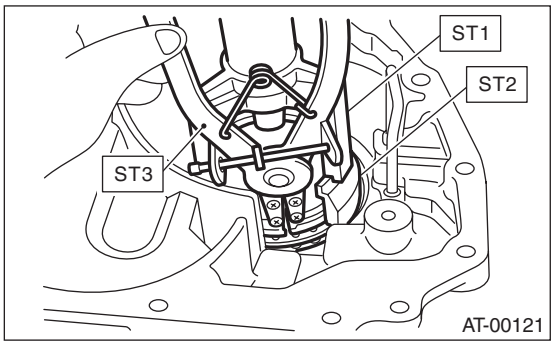

E: INSPECTION

- Use compressed air to make sure that the transfer pipe and extension case passages are not clogged or leaking.
- Inspect the extension end play, and adjust it to within the standard value.

MP-T model <Ref. to 4AT-77, MP-T MODEL, ADJUSTMENT, Transfer Clutch.>
VTD model <Ref. to 4AT-78, VTD MODEL, ADJUSTMENT, Transfer Clutch.>